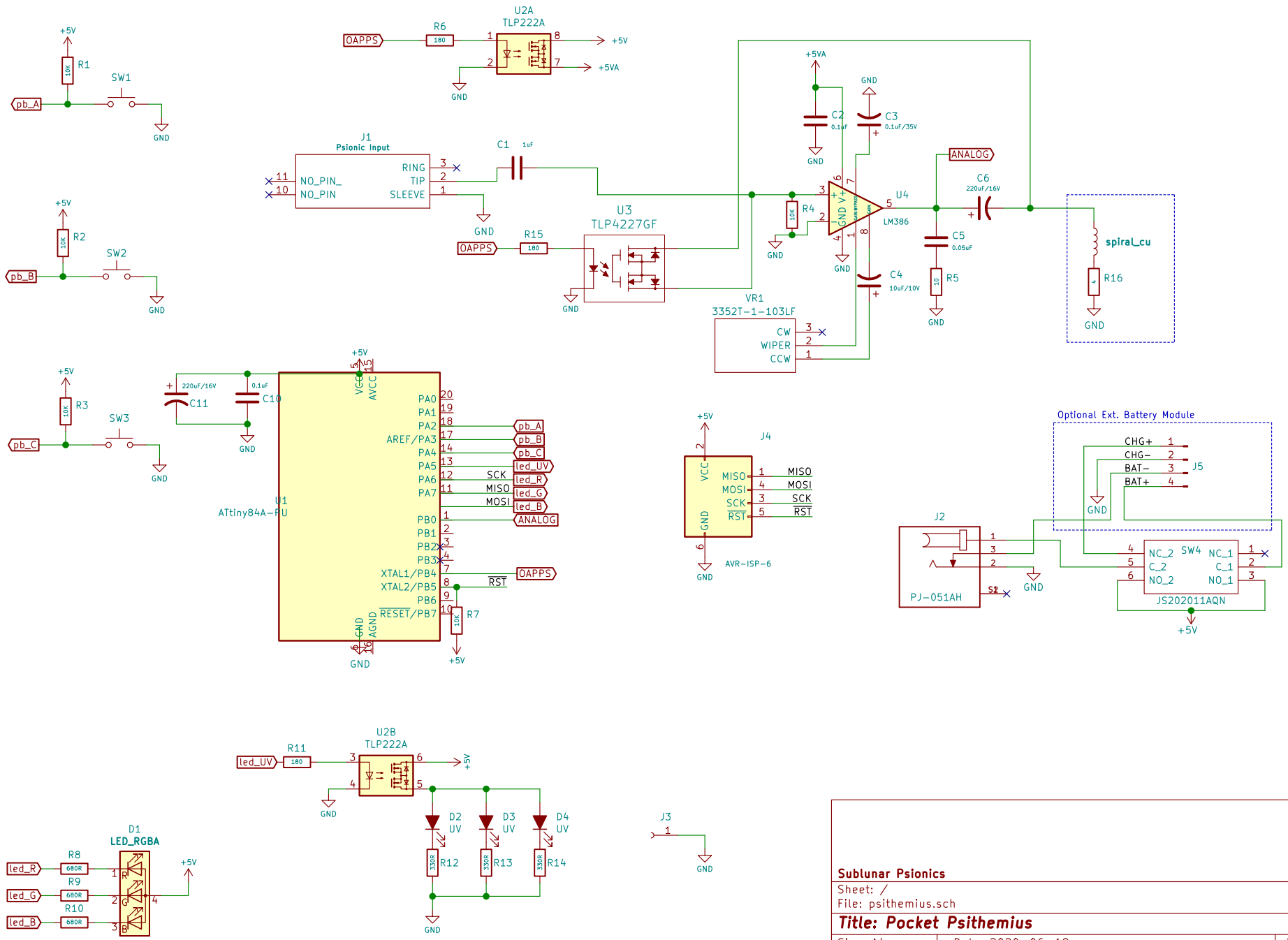

Sublunar Psionics

Sheet: /

File: psithemius.sch

Title: Pocket Psithemius

Size: A4	Date: 2020-06-18	**Rev: 12**
KiCad E.D.A. kicad (5.1.5)-3		Id: 1/1